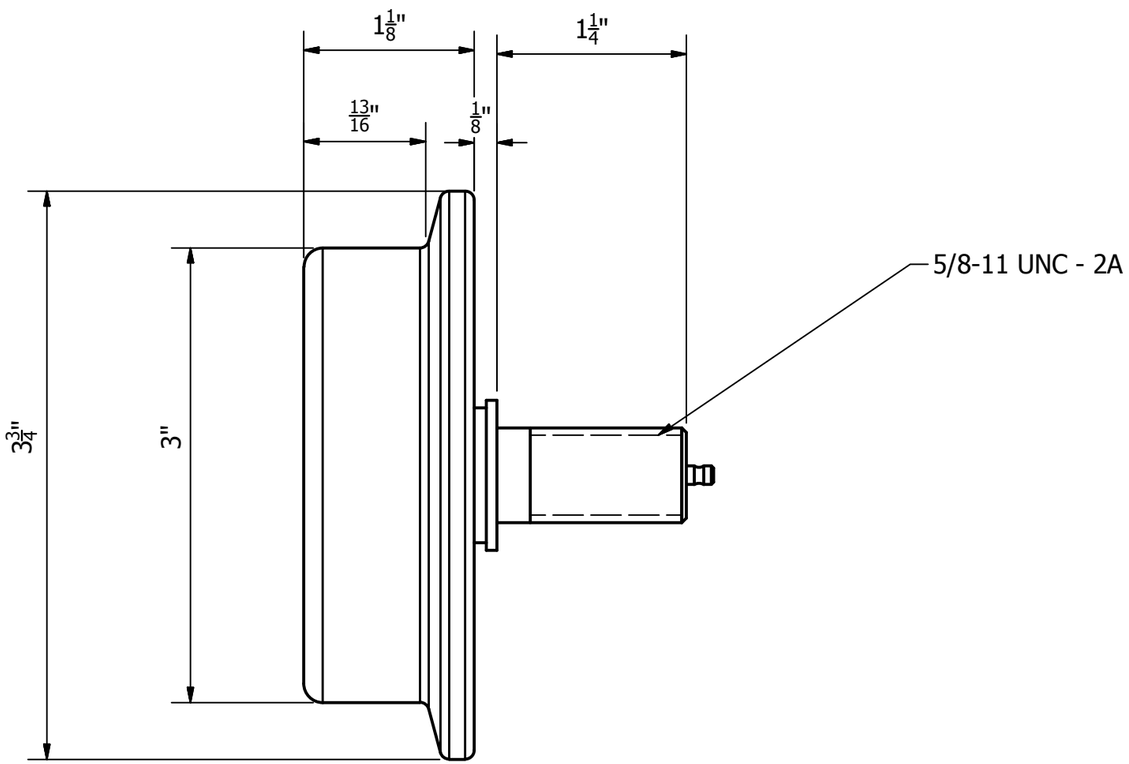

S300FT375-58

DRAWN jkm	4/20/2010	GREY HUB® A Division of Versa Handling Company
CHECKED		TITLE
QA		
MFG		
APPROVED		SIZE B / DWG NO FLAT TREAD WHEELS / REV
		SCALE / SHEET 4 OF 6